DIV d.o.o., TVORNICA VIJAKA / FASTERNERS FACTORY, Bobovica 10a, HR-10430, Samobor, Hrvatska (Croatia)
Tel: +385 1 3377 000 / Fax: +385 1 3376 155 / e-mail: div@div.com.hr / www.div.com.hr
MB: 3659976 / Žiro račun: RBA 2484008-1100228260 / Devizni račun/Account: 038-2500-978-3659976 - Raiffeisen Bank Austria d.d., Zagreb
SWIFT: RZBHHR2X / IBAN: HR8224840081100228260 / MBS 080127368 kod Trgovačkog suda u Zagrebu / Temeljni kapital: 18.472.800,00 kn - uplaćen u cijelosti/entirely paid
Uprava/Board of Directors: T. Debeljak - predsjednik/president, D. Pappo - član/member, **Nadzorni odbor/Supervisory Board:** B. Debeljak - predsjednik/president

DIV 6120

Obujmica cijevna s izolacijom

Isophonic pipe clamps IFO with M8+M10 threaded nut

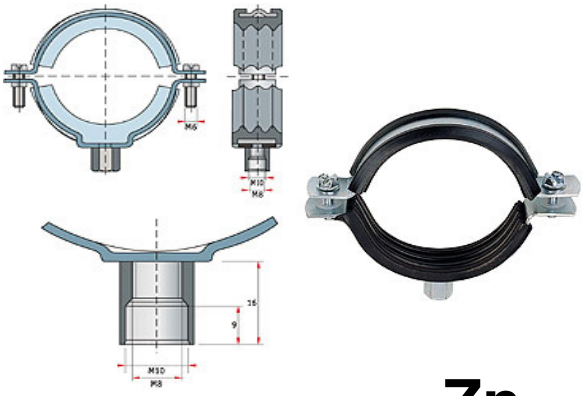

Zn

za cijev	za cijev	l	
12-15	1/4'	1/4'	50
15-19	3/8'	3/8'	50
20-25	1/2'	1/2'	50
26-30	3/4'	3/4'	50
32-36	1'	1'	50
38-43	1'1/4'	1'1/4'	25
47-51	1'1/2'	1'1/2'	25
53-58		54	25
60-64	2'	2'	25
68-72		70	25
75-80	2'1/2'	2'1/2'	25
81-86		83	25
87-92	3'	3'	25
99-105	3'1/2'	3'1/2'	25
107-112		110	25
113-118	4'	4'	25
125-130		125	25
138-142	5'	5'	25
159-166	6'	6'	25
200-212		200	25

DIV 6125

Obujmica cijevna

Steel clamps CDG with welded nut

Zn

matica	za cijev	za cijev	l	
M 8	18	3/8'	3/8'	50
M 8	22	1/2'	1/2'	50
M 8	27	3/4'	3/4'	50
M 8	34	1'	1'	50
M 8	42	1'1/4'	1'1/4'	50
M 8	48	1'1/2'	1'1/2'	50
M 8	60	2'	2'	50
M 8	50		50	20
M 10	63		63	20
M 10	76	2'1/2'	76	20
M 10	90	3'	90	20
M 10	100	4'	100	20
M 10	110		110	20
M 10	125		125	20
M 10	140	5'	140	20
M 10	160	6'	160	10
M 10	180		180	10
M 10	200		200	10
M 10	220		220	10
M 10	250		250	10
M 10	300		300	10